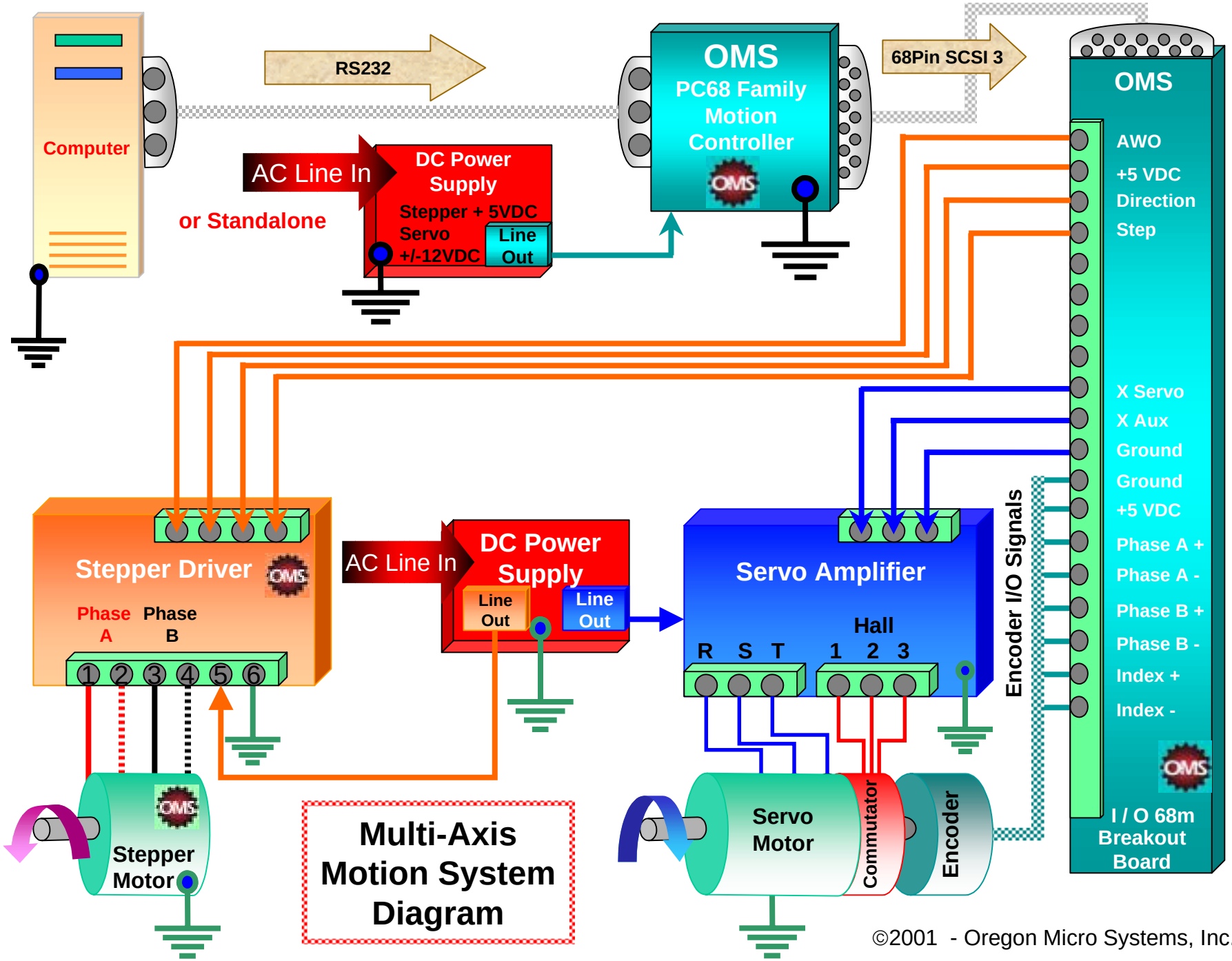

©2001 - Oregon Micro Systems, Inc.